MOS CAPACITOR IN NON-EQUILIBRIUM REGIME (DEEP DEPLETION)

$$E_s = \frac{q N_a W}{\varepsilon_s}\left(1 - \frac{x}{W}\right) \qquad \varepsilon_s E_s(0^+) - \varepsilon_i E_i = Q_M$$

$$E_i = \frac{\varepsilon_s}{\varepsilon_i} E_s(0^+) - \frac{Q_M}{\varepsilon_i} = \frac{q N_a W}{\varepsilon_i} - \frac{Q_M}{\varepsilon_i}$$

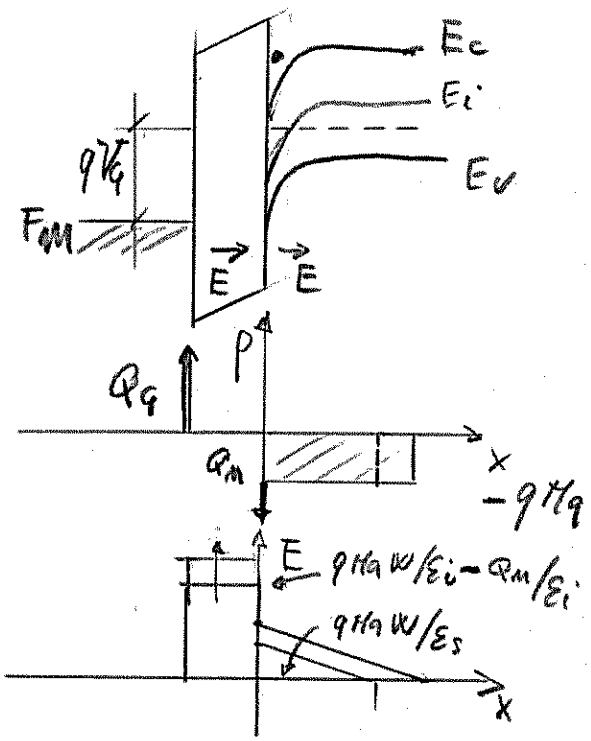

Thickness of the depletion layer

$$W = \sqrt{\frac{2\varepsilon_s \phi_s}{q N_a}} > W_T$$

Gate voltage

$$V_G = \phi_s + V_i = \phi_s + E_i t_i = \phi_s + \left(q N_a W - Q_M\right)\frac{t_i}{\varepsilon_i}$$

$$V_G = \phi_s + \left(q N_a \sqrt{2\varepsilon_s \phi_s / q N_a} - Q_M\right)/C_i \qquad \left[C_i = \varepsilon_i / t_i\right]$$

$$V_G = \phi_s + \sqrt{2\left(q \varepsilon_s N_a / C_i^2\right)\phi_s} - Q_M / C_i$$

$$\rightarrow V_G = \phi_s + \sqrt{2 V_0 \phi_s} - Q_M / C_i \qquad V_0 = \left(q \varepsilon_s N_a / C_i^2\right)$$

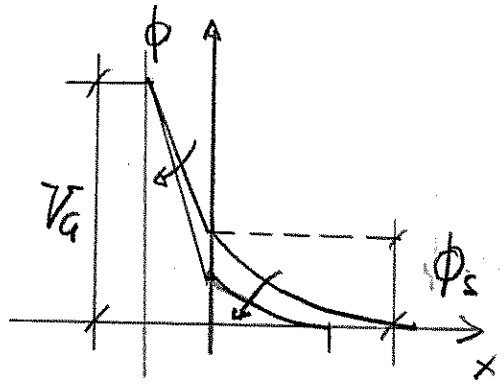

Fundamental eq. of the CCD

$$\Rightarrow Q_M = -C_i\left(V_G - \phi_s - \sqrt{2 V_0 \phi_s}\right)$$

$$\rightarrow \phi_s = V_G + \frac{Q_M}{C_i} - V_0\left[\sqrt{1 + \frac{2}{V_0}\left(V_G + \frac{Q_M}{C_i}\right)} - 1\right] \qquad Q_M < 0$$

Vertical confinement

$$V_G = \phi_s + \sqrt{2V_0\phi_s} - Q_M/C_i \qquad V_0 = q\frac{\varepsilon_s N_a}{C_i^2}$$

$$Q_M = -C_i\left(V_G - \phi_s - \sqrt{2V_0\phi_s}\right)$$

$$Q_{M_{MAX}} = -C_i\left(V_G - \phi_{s_{INV}} - \sqrt{2V_0\phi_{s_{INV}}}\right)$$

$$\left[\phi_{s_{INV}} = 2kT/q \log\left(N_a/n_i\right)\right]$$

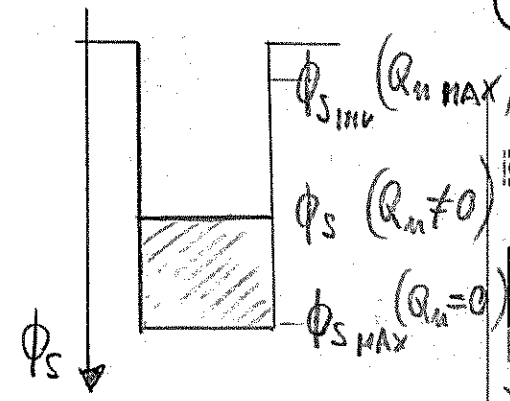

ϕ_s cannot decrease beyond $\phi_{s_{INV}}$ because an electric field and a depletion layer are required to keep separated electrons and holes

when $\phi_s < \phi_{s_{INV}}$ the system behaves like a forward biased diode

Lateral confinement

x) $V_{G1} > V_{G2} \iff \phi_{s_1} > \phi_{s_2}$ $\qquad V_{G1} = V_{GH} \quad V_{G2} = V_{GL}$

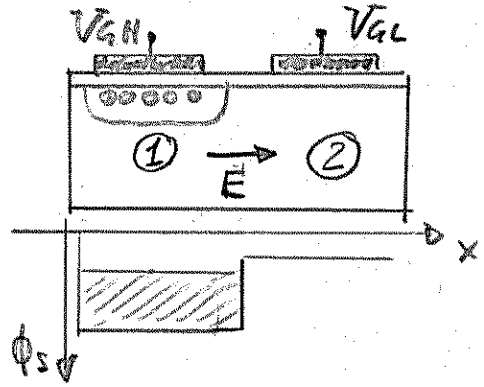

$Q_{M\,MAX}$ corresponds to $\phi_{s_1} = \phi_{s_2}$

$$\begin{cases} V_{GH} = \phi_{s_1} + \sqrt{2V_0\phi_{s_1}} - Q_{M\,MAX}/C_i \\ V_{GL} = \phi_{s_2} + \sqrt{2V_0\phi_{s_2}} \end{cases} \xRightarrow[\phi_{s_1}=\phi_{s_2}]{} Q_{M\,MAX} = -C_i\left(V_{GH} - V_{GL}\right)$$

y) The oxide thickness is increased to confine the electrons

$$\begin{cases} Q_M = -C_{i1}\left(V_{GH} - \phi_{s_1} - \sqrt{2V_{01}\phi_{s_1}}\right. \\ 0 = -C_{i2}\left(V_{GH} - \phi_{s_2} - \sqrt{2V_{02}\phi_{s_2}}\right. \end{cases} \xRightarrow{\phi_{s_1}=\phi_{s_2}} Q_{MAX}$$

$$\left[V_{01} = q\varepsilon_s N_a/C_{i1}^2 \qquad V_{02} = q\varepsilon_s N_a/C_{i2}^2\right]$$

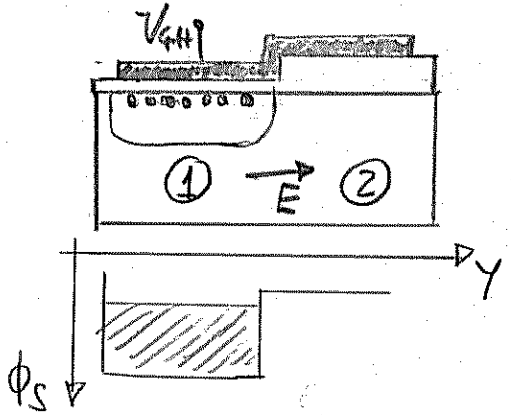

GoPhoton! Partners: Imperial College London, Politecnico Milano, Laser Centre
GoPhoton! An Initiative of: Funded by:

Charge transfer mechanism

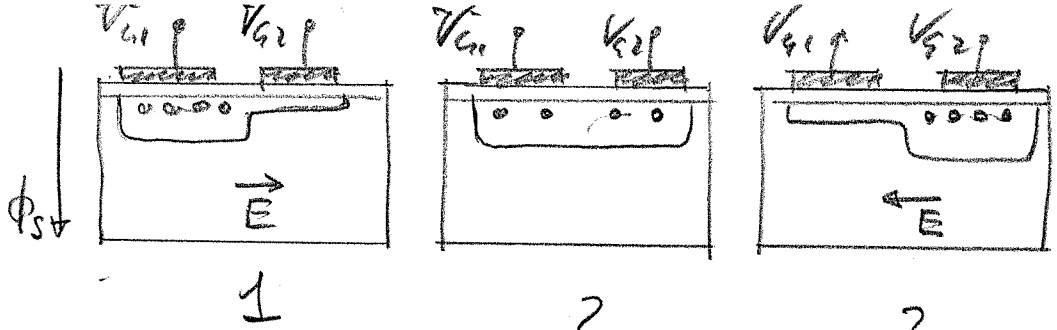

1) $V_{G1} = V_{GH} > V_T \quad V_{G2} = V_{GL} < V_T$

$\phi_{S1} > \phi_{S2}$

2) $V_{G1} = V_{G2} \rightarrow \phi_{S1} = \phi_{S2}$

3) $V_{G1} = V_{GL} \quad V_{G2} = V_{GH}$

$\phi_{S1} < \phi_{S2}$

V_{GH} is limited by breakdown

$V_{GL} > 0$ to give a depleted surface

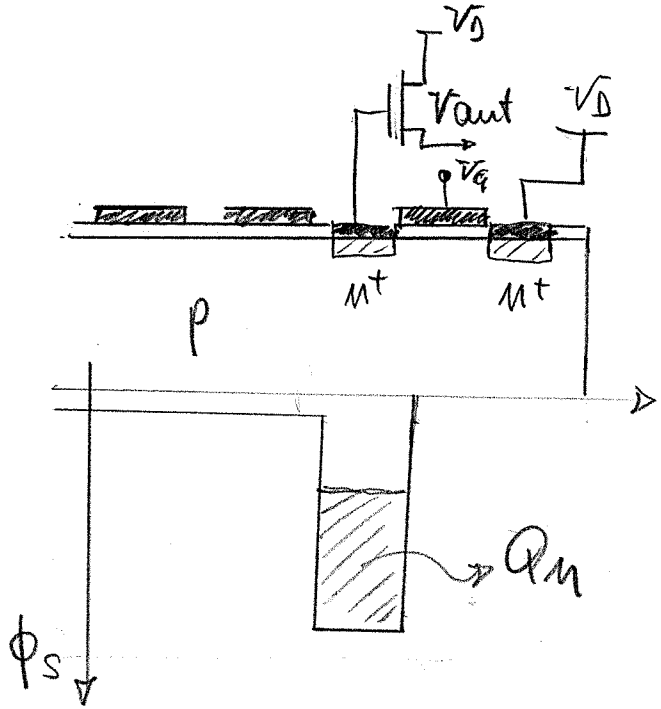

Output stage

Conversion of charge into voltage

The charge is transferred to a capacitor connected to a MOSFET voltage follower

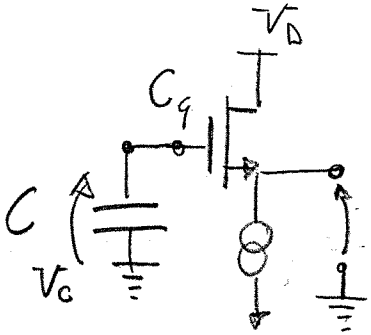

$V_{out} = V_c - V_{GS} \qquad V_c = \dfrac{Q_n}{C + C_G}$

$t = 0 \quad V_G = V_{GH}$ Then $\rightarrow$

$\rightarrow V_G = V_{GL}$

GoPhoton! An initiative of: ECOP European Centre for Outreach in Photonics
Funded by:
GoPhoton! Partners: IOFO Imperial College London Vrije Universiteit Brussel Leibniz Ferdinand-Braun-Institut POLITECNICO MILANO 1863 INSTITUT OPTIQUE GRADUATE SCHOOL ParisTech EPF Ecole Polytechnique Fédérale de Lausanne Laser Centre